An Introduction to the Ion-Optics of Magnet Spectrometers

U. Tokyo, RIKEN
The 14th RIBF Nuclear Physics Seminar

Series of Three Lectures
CNS, University of Tokyo
February 27, 2006

Georg P. Berg
University of Notre Dame

The Lecture Series

1st Lecture: 2/27/06, 10:30 am: Formalism of ion-optics and the design of a complete system

2nd Lecture: 2/27/06, 1:30 pm: Magnet design, systems and diagnostics

3rd Lecture: 2/27/06, 3:00 pm: Experiments with dispersion matched high resolution spectrometers

2nd Lecture

2nd Lecture: 10/7/05, 2:00 pm: Ion-optical elements, properties & design

- Electro-magnetic elements in ion-optical systems
  Dipoles, Quadrupoles, Multipoles, Wien Filters
- Combining elements, ion-optics properties
- Diagnostics and field measurements

- Review 1st Lecture (4)
- Overview magnetic elements (5)
- Creation of magnetic fields B (6 - 9)
- Design and examples of dipole magnets (10 -16)
- Quadrupole magnets, doublet, triplet (17 – 20)
- Spectrometers (21 – 24)
- Wien Filter (25)
- Diagnostics considerations (26)
- Field measurements (27 - 30)

Review 1st Lecture

Lorentz Force: $\vec{F} = q\vec{E} + q\vec{v} \times \vec{B}$ (1)

Electric force — Magnetic force

TRANSPORT of Ray X_0 $\quad X_n = R\,X_0$ (3)

using Matrix R $\quad R = R_n R_{n-1} \ldots R_0$ (4)

TRANSPORT of σ Matrix (Phase space ellipsoid) $\quad \sigma_1 = R\sigma_0 R^T$ (10)

Beam emittance: $\quad \varepsilon = \sqrt{\sigma_{11}\sigma_{22} - (\sigma_{12})^2}$ (5)

Taylor expansion, higher orders, solving the equation of motion,

phases of a separator project

Schematic Overview of Magnetic Elements (Iron dominated)

Pole shape	Field	Pole,analyt.	B_x	wI
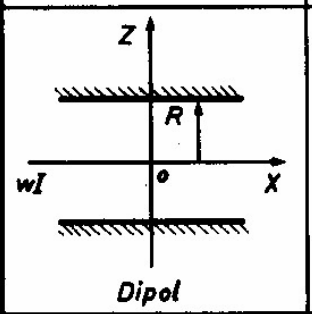	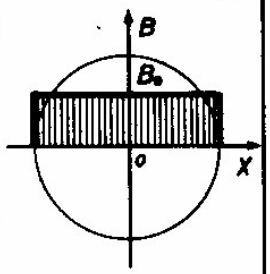	$Z=\pm R$	$a_1=B_0$	$\frac{2}{\mu_0}B_0R$
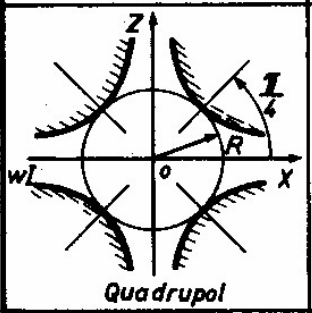	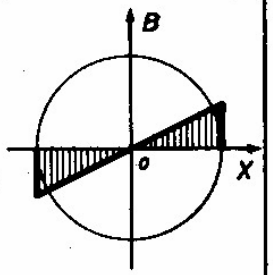	$XZ=\pm\frac{R^2}{2}$	$a_2X=gX$	$\frac{1}{\mu_0}gR^2$
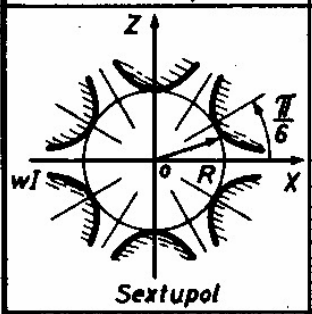	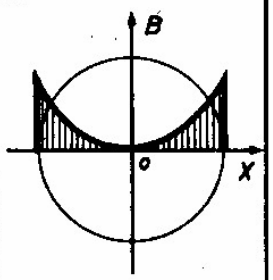	$Z(X^2-\frac{Z^2}{3})=\pm\frac{R^3}{3}$	$a_3(X^2-Z^2)$	$\frac{2}{3\mu_0}a_3R^3$
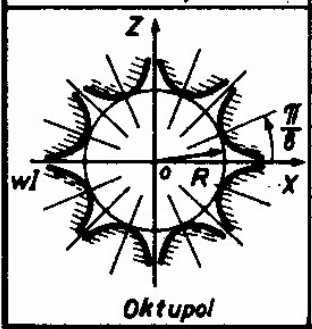	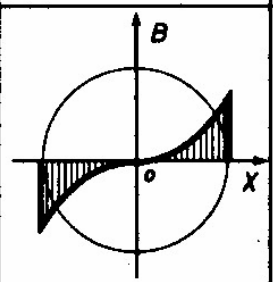	$XZ(X^2-Z^2)=\pm\frac{R^4}{4}$	$a_4X(X^2-3Z^2)$	$\frac{1}{2\mu_0}a_4R^4$

Iron dominated:

B field is determined by properties & shape of iron pole pieces

Power ~ I^2 ~ R^4

Required wI = Ampere-turns for desired magnet strength B_0, g, a_3, a_4 can be calculated formula in last column.

Coils are not shown in drawing in 1st colunm

G. Schnell, Magnete, Verlag K. Thiemig, Muenchen 1973

Creation of magnetic fields using current

Current loop

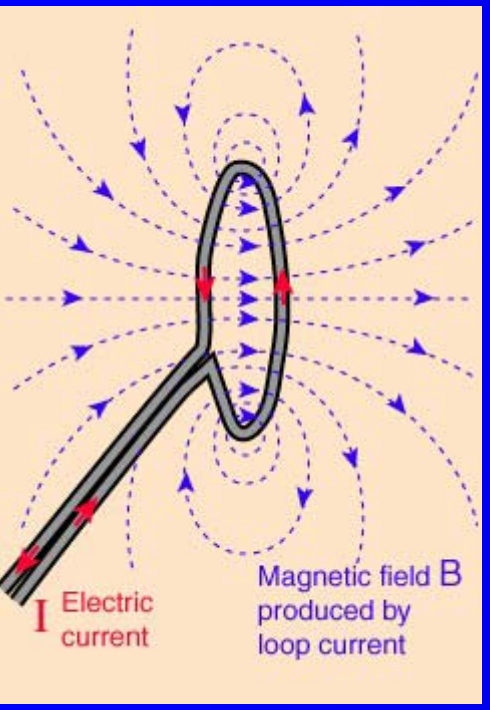

Helmholtz coil, Dipole

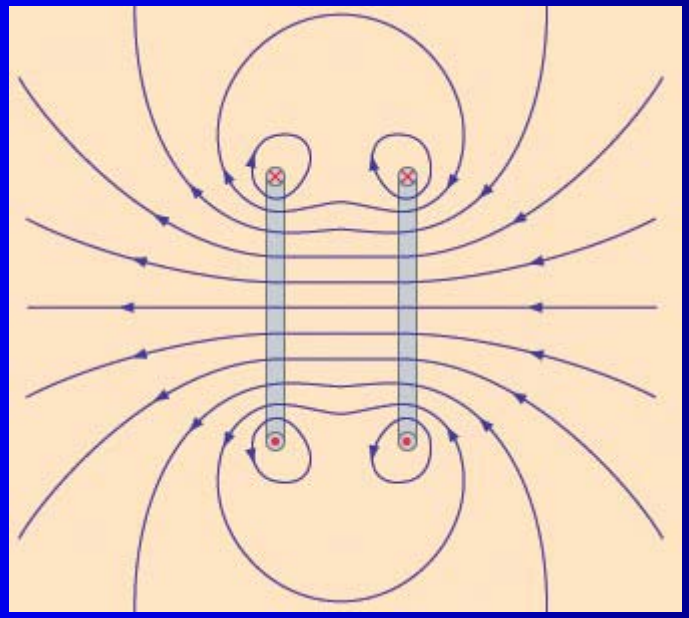

Helmholtz coil, reversed current, Quadrupole

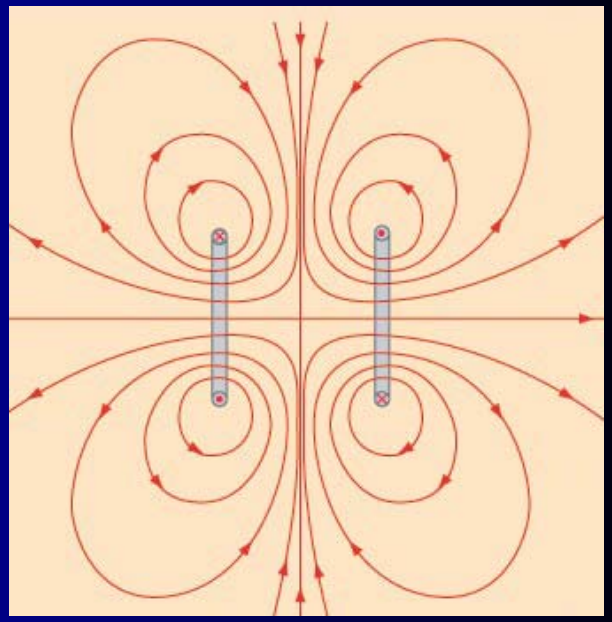

Biot-Savart's Law

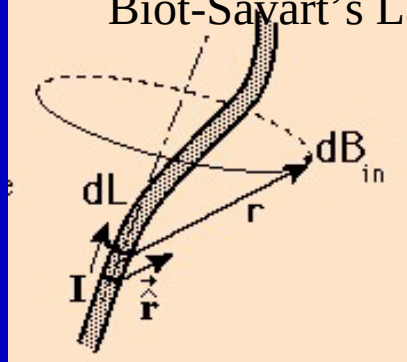

Magnetic field of a current element

$$d\vec{B} = \frac{\mu_0 I d\vec{L} \times \hat{\vec{r}}}{4\pi r^2} \quad (16)$$

where

$d\vec{L}$ = infinitesmal length of conductor carrying electric current I

$\hat{\vec{r}}$ = unit vector to specify direction of the vector distance r from the current to the field point.

Magnetization in Ferromagnetic material:

$$B = \mu H$$

B = magn. Induction
H = magn. Field
μ = magn. permeability

Creation of magnetic fields using permanent magnets

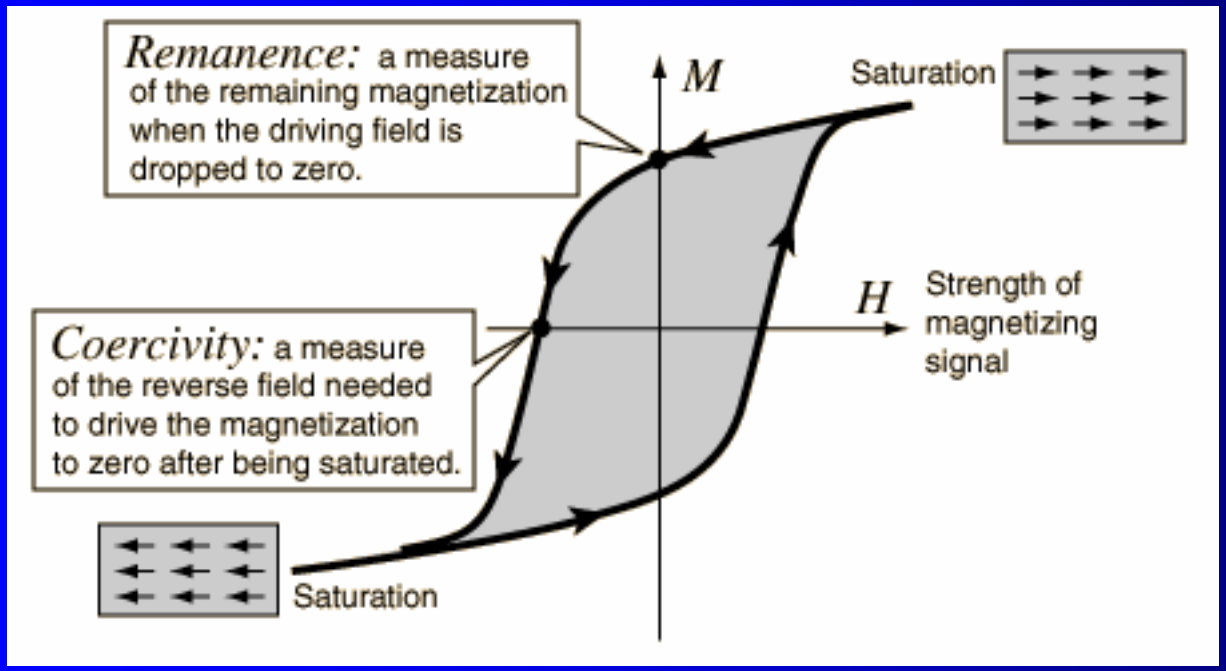

Magnet iron is **soft**: Remanence is very small when H is returned to 0
Permanent magnet material is **hard**: Large remaining magnetization B

Permanent magnets can be used to design dipole, quadrupole and other ion-optical elements. They need no current, but strength has to be changed by mechanical adjustment.

A few comments on

Normal (NC), Super (SC) conducting, Permanent magnets (PM)

- Ion-optical elements can are are built with all three methods: NC,SC and PM
- Ion-optics is concerned with the fields and not how they are created.
- Magnet design is very different because of different technologies.
- Fields in NC, SC (current driven) magnets can be easily varied, PM need mechanical changes.
- Normal conducting coils are limited to typically 10 A/mm^2 (though 50 A/mm2 is possible)
- NC conducting need a lot of electrical power, SC much less, PM none.
- Strong, current dominate SC magnets can be built (~ 5 - 10 T).
- Iron dominated magnets are limited by iron saturation (< 1.7 – 2.2 T).
- SC need 4.2 K cryogenic and liquid Helium cooling (note: high temp. SC improving)

SOFT IRON

DC Magnetization Curves for Various Magnetic Materials

Vanadium Permandur

Pure Iron

INTRINSIC INDUCTION—Bi—KILOGAUSSES (Bi = B-H)

MAGNETIZING FORCE—H—OERSTEDS

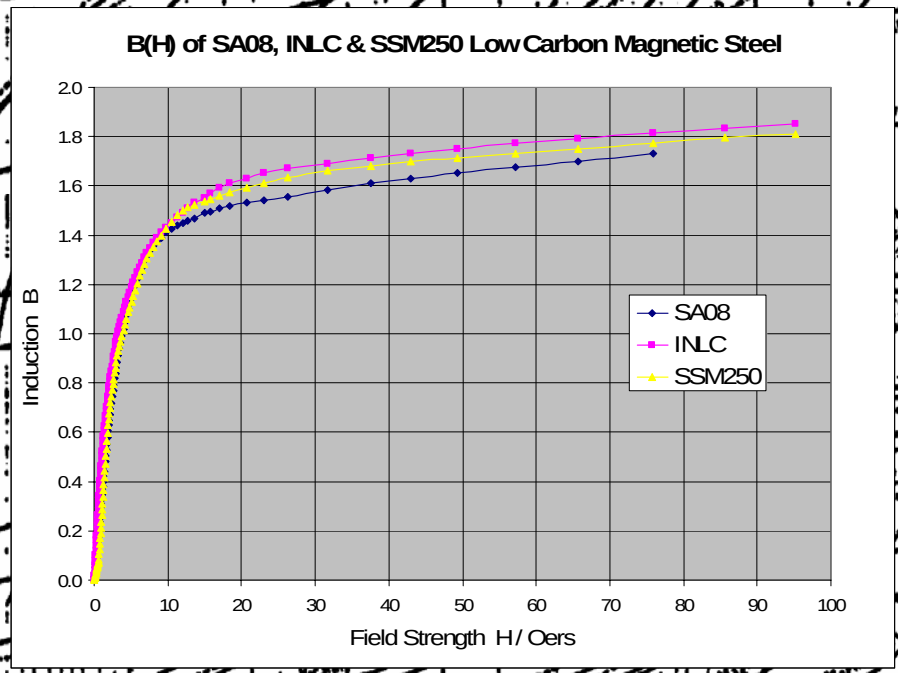

Design of an iron-dominated Dipole magnet

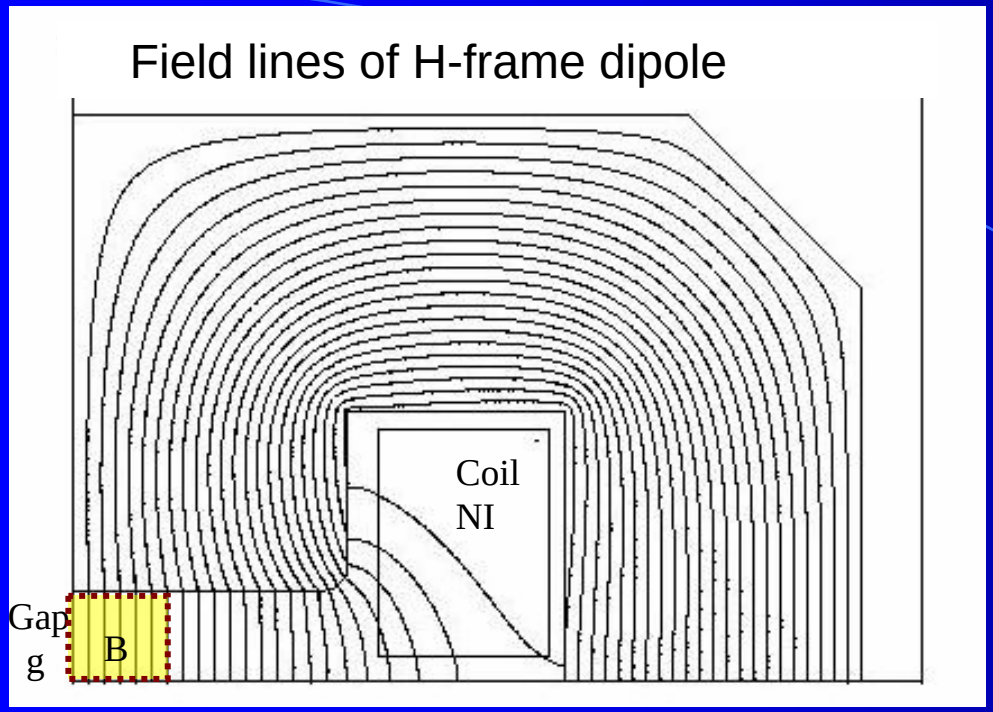

From Ampere's law:

$$NI\ (\text{Ampere turns}) = \frac{B\ (T) * g\ (m)}{4\pi * 10^{-7}\ (m/A)} \qquad (17)$$

Units: m = meter
T = Tesla
A = Ampere

⇑ Magnetic field B in Good-field region

defined by ion-optical requirement,
e.g. $dB/B < 10^{-4}$

For symmetry reasons only a quarter of the full dipole is calculated & shown

The Field calculation was performed Using the finite element (FE) code MagNet (Infolytica). Other programs are TOSCA or POISSON.

Note: FE codes solve the static of time varying Maxwells Equations numerically by "meshing" the geometry in triangles in 2d or "bricks" in 3d. This allows to precisely calculate the Fields (B,E) for any configuraiton of current and materials, like ferromagnetic metals

SHARAQ Dipole D2

Iron-dominated, normal conducting Dipole Magnet with constant field in Dipole Gap (Good-field region)

- Soft magnet iron, B(H)
- Hollow copper conductor for high current density < 10 A/mm^2
- Iron magnetization saturates at about 1.7 T
- For B > 2 T superconducting (current dominated or hybrid) magnets are used.

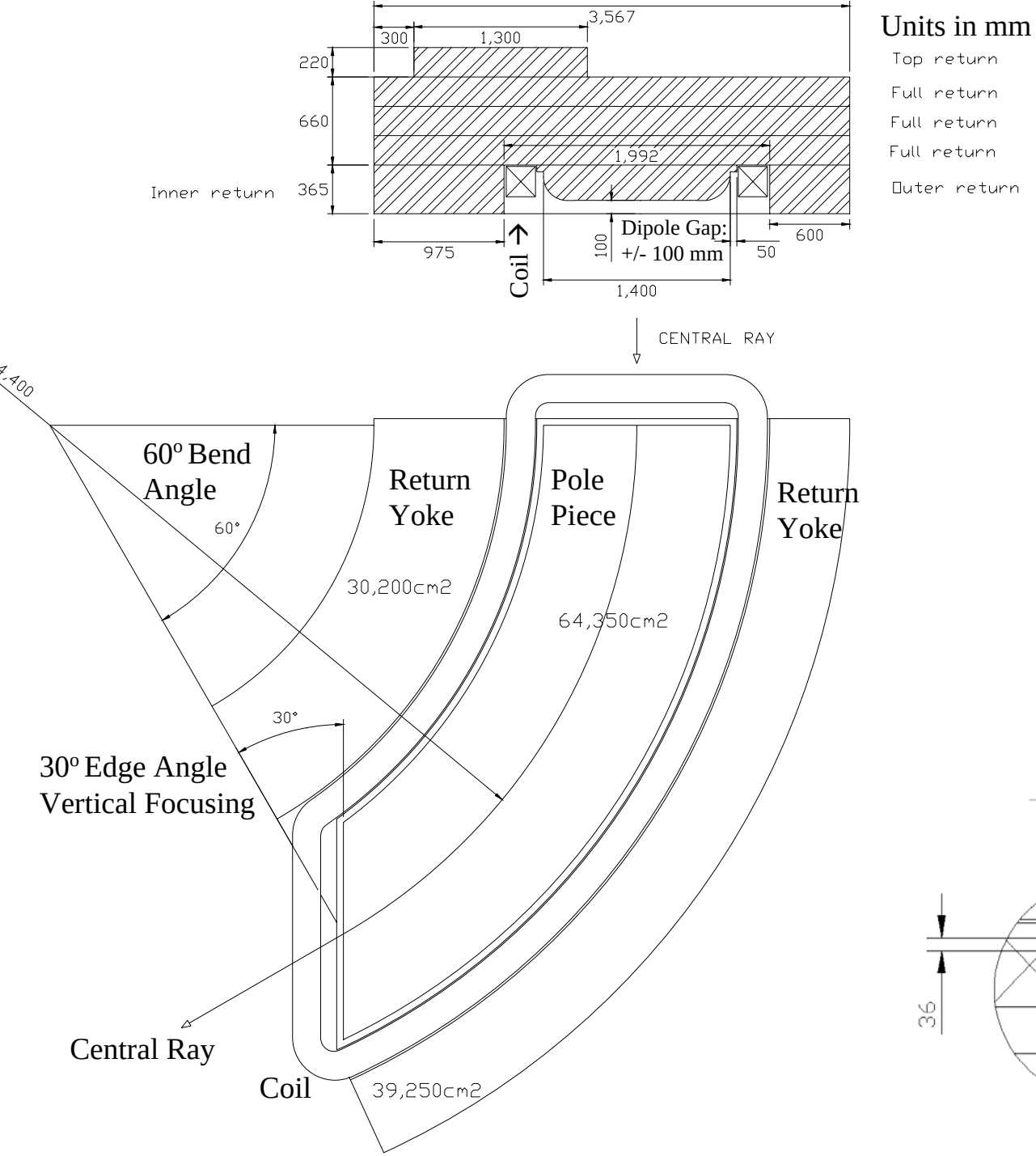

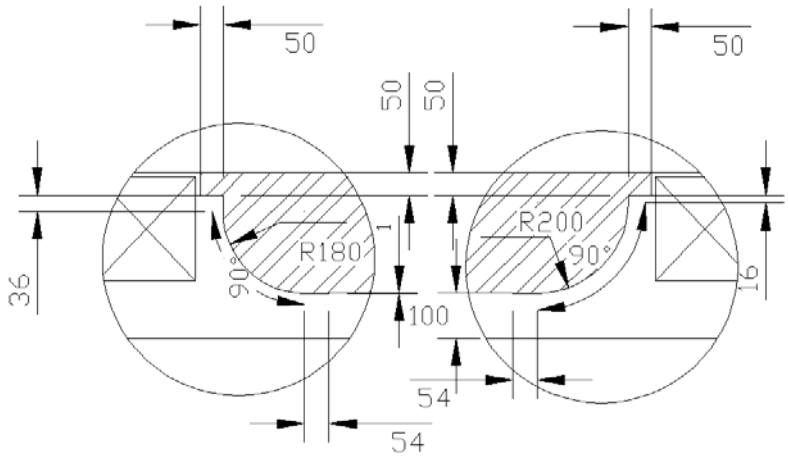

SHARAQ Dipole D2 Field calculation

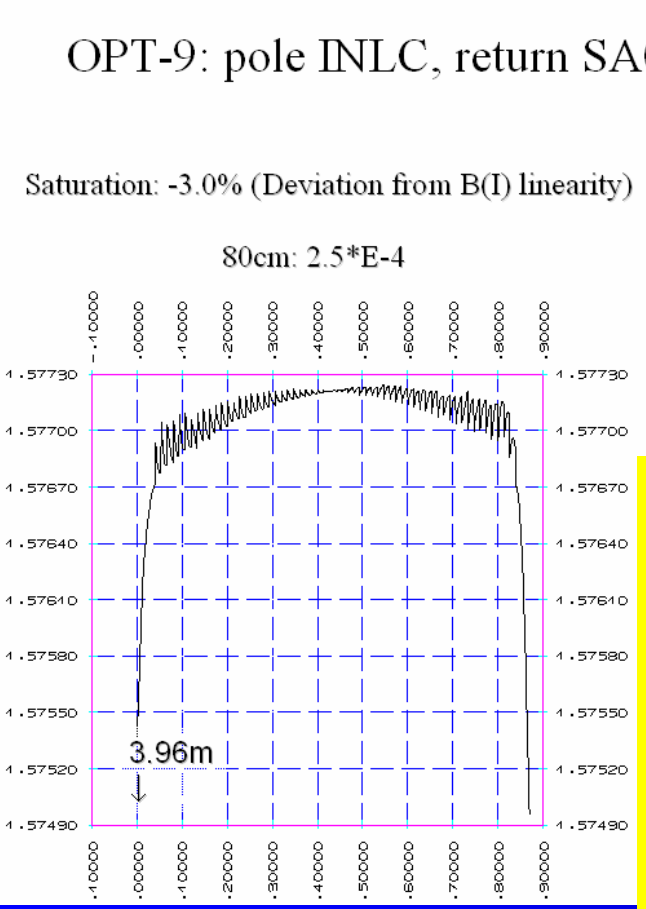

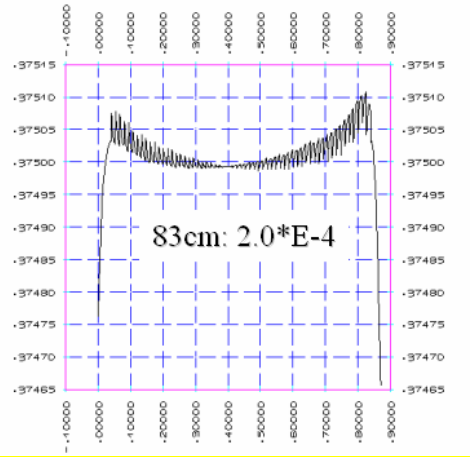

These figures show the Good-field region in the center of the magnet and the maximum field B as function of the current I in the conductor

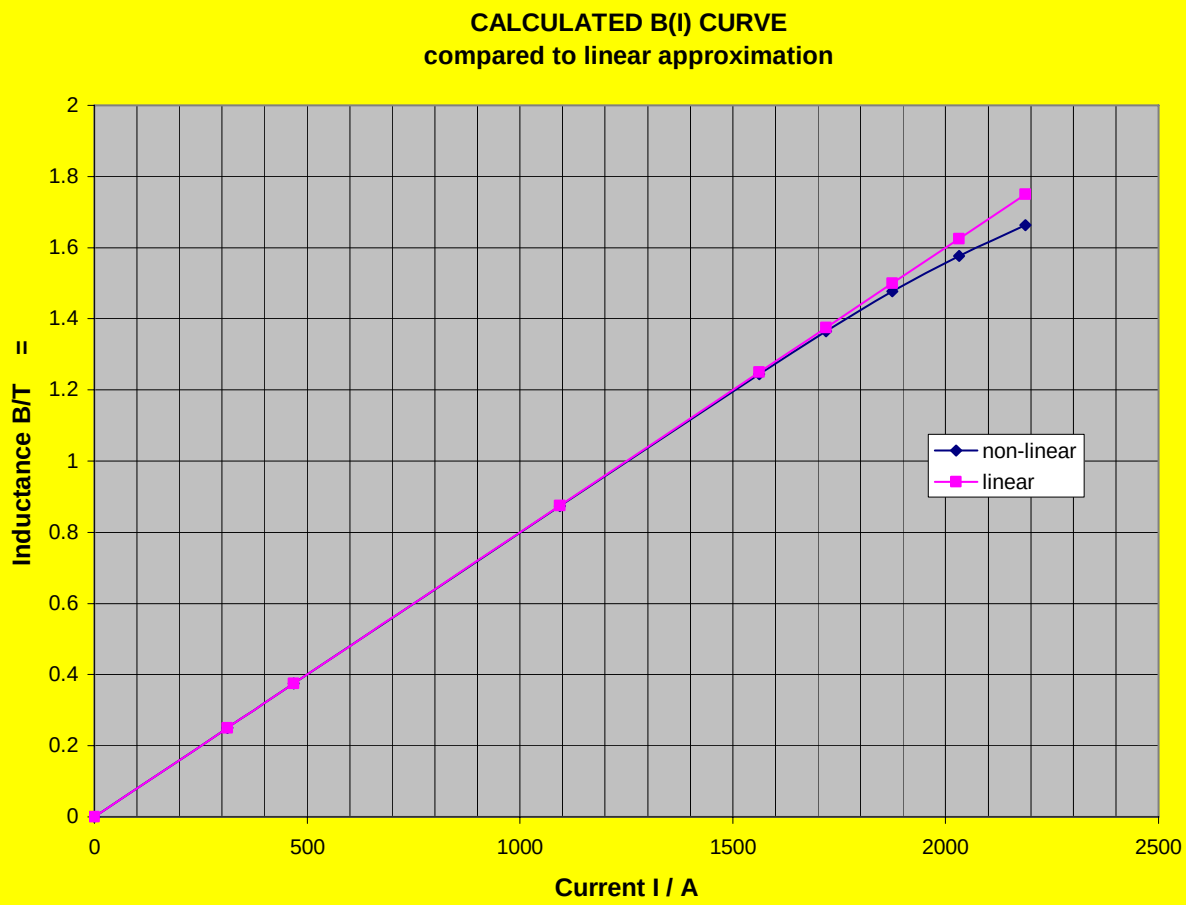

Fringe field & Effective field length L_{eff}

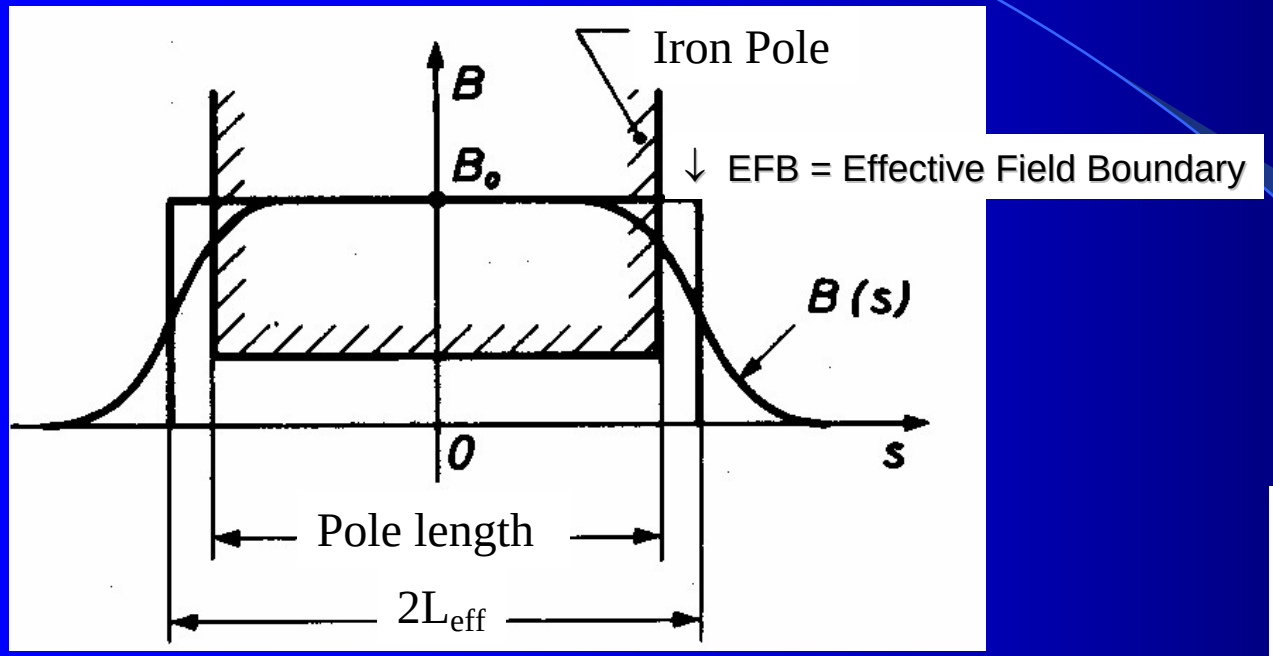

$$L_{eff} = \int_0^{\infty} B\, ds / B_0 \qquad (18)$$

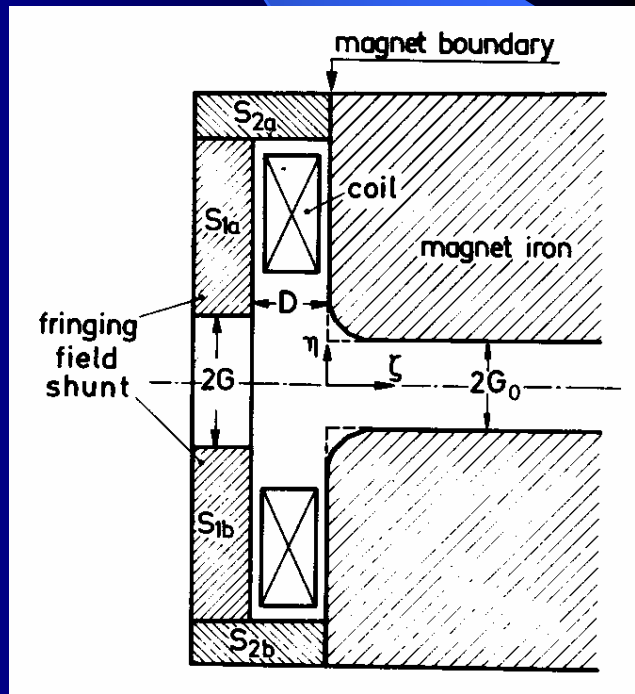

Note:

1) The fringe field is important even in 1st order ion-optical calculations.
2) Rogowski profile to make L_{eff} = Pole length.
3) The fringe field region can be modified with field clamp or shunt.

SHARAQ Dipole D2

Iron-dominated, normal conducting Dipole Magnet with constant field in Dipole Gap (Good-field region)

- Soft magnet iron, B(H)
- Hollow copper conductor for high current density < 10 A/mm^2
- Iron magnetization saturates at about 1.7 T
- For B > 2 T superconducting (current dominated or hybrid) magnets are used.

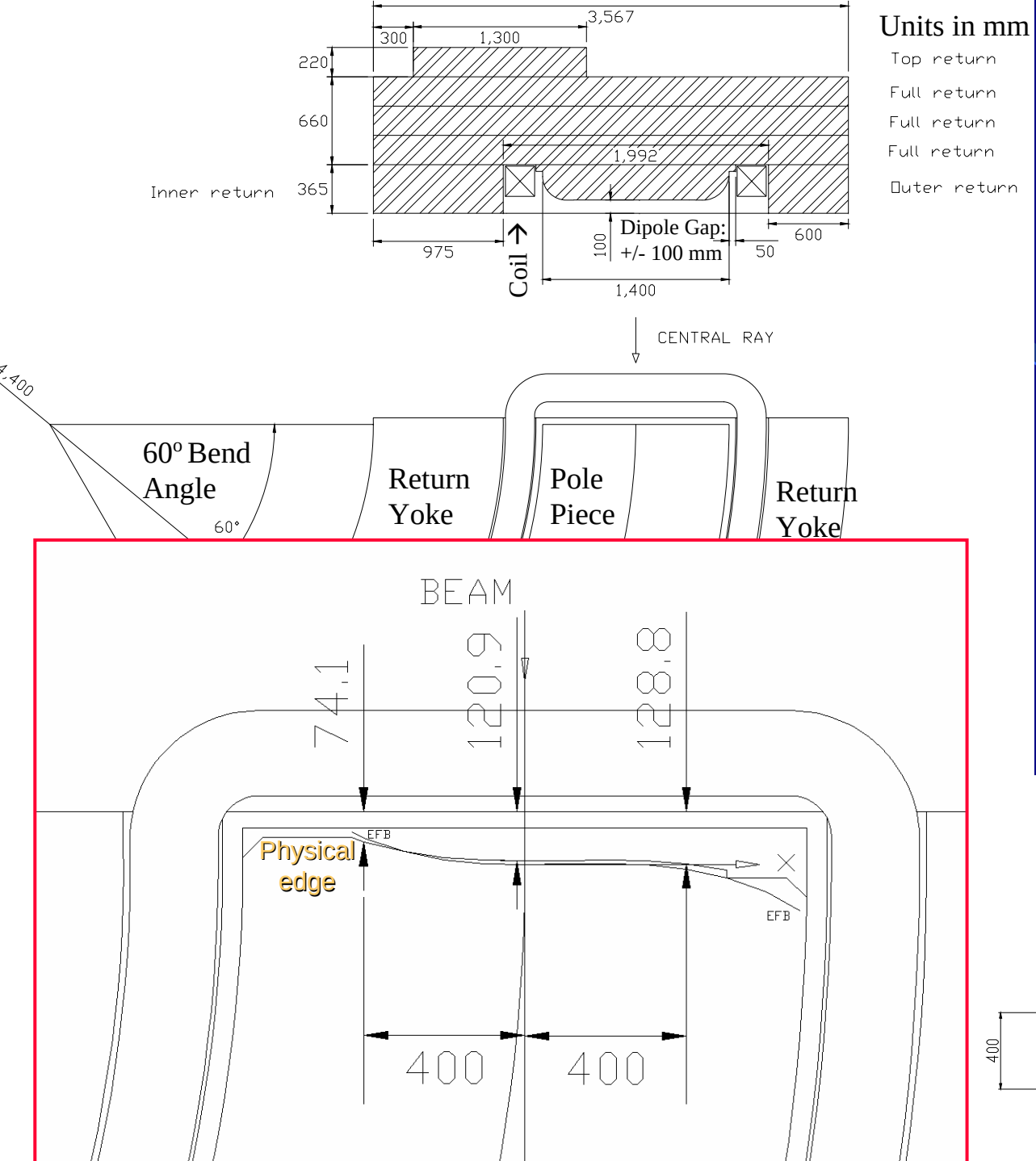

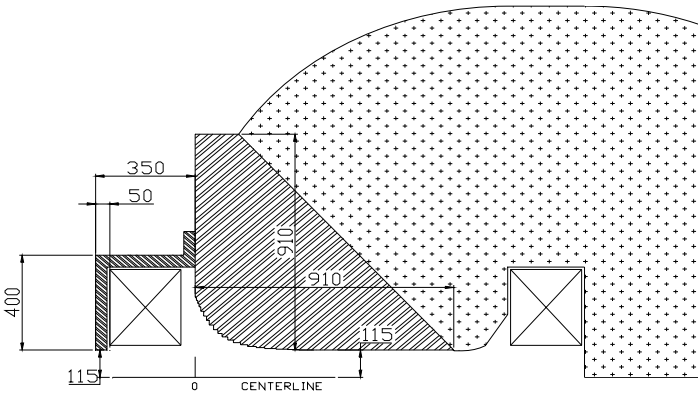

Rogowski end profile

Units in mm

SHARAQ Dipole D2 specifications and Coil design

SHARAQ D2 Dipole magnet

Max. Rigidity	6.80	Tm
Bending Radius:	4400	mm
Total gap	200	mm
Pole width	1400	mm
Bend angle	60	deg
Central ray length	4607.7	mm
Iron weight	255	tons
Weight of 2 coils	7.4	tons
Bmax	1.55	T
DC/Power	310	kW
DC/Current, no saturatior	1980	A
DC, including saturation	2050	A
Max. allowed current	2130	A
DC/Voltage	150	V
Conductor	26x26/16mm	
Pancakes/coil	4	
Turns/pancake	16	
Total turns/magnet	128	
Pressure drop	5	atm
Temp. rise	30	deg C
Water flow, magnet	150	l/min
Current density	4.3	A/mm2
Resistance/magnet	73.2	mOhm
Inductance	618	mH
L/R	8.6	s
Ramp time	15	s
Dynam. Power	480	kW
Excess Voltage to ramp	85	V
Stored Energy	1320	kJ

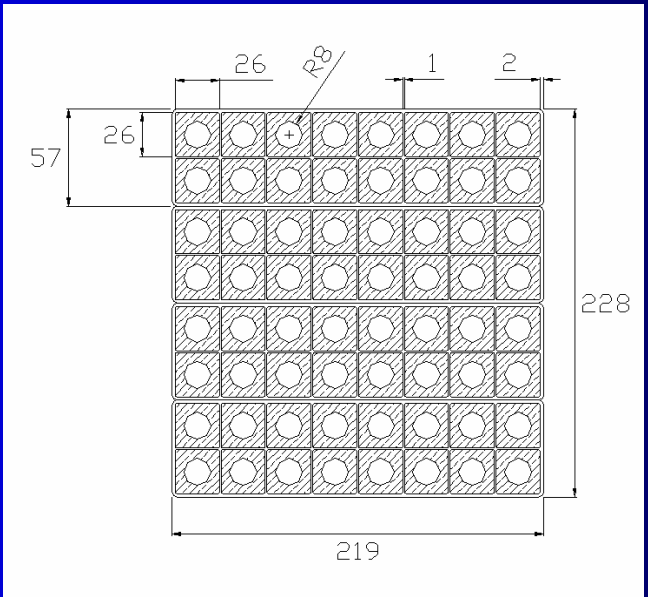

This figure shows the coil with hollow cupper conductor for water cooling (4.3 A/mm^2)

Thumb rule:
Water cooling has to dissipate the complete magnet power IR^2

Dipole H-Magnet for St. George a new recoil separator at Notre Dame University for astrophysics

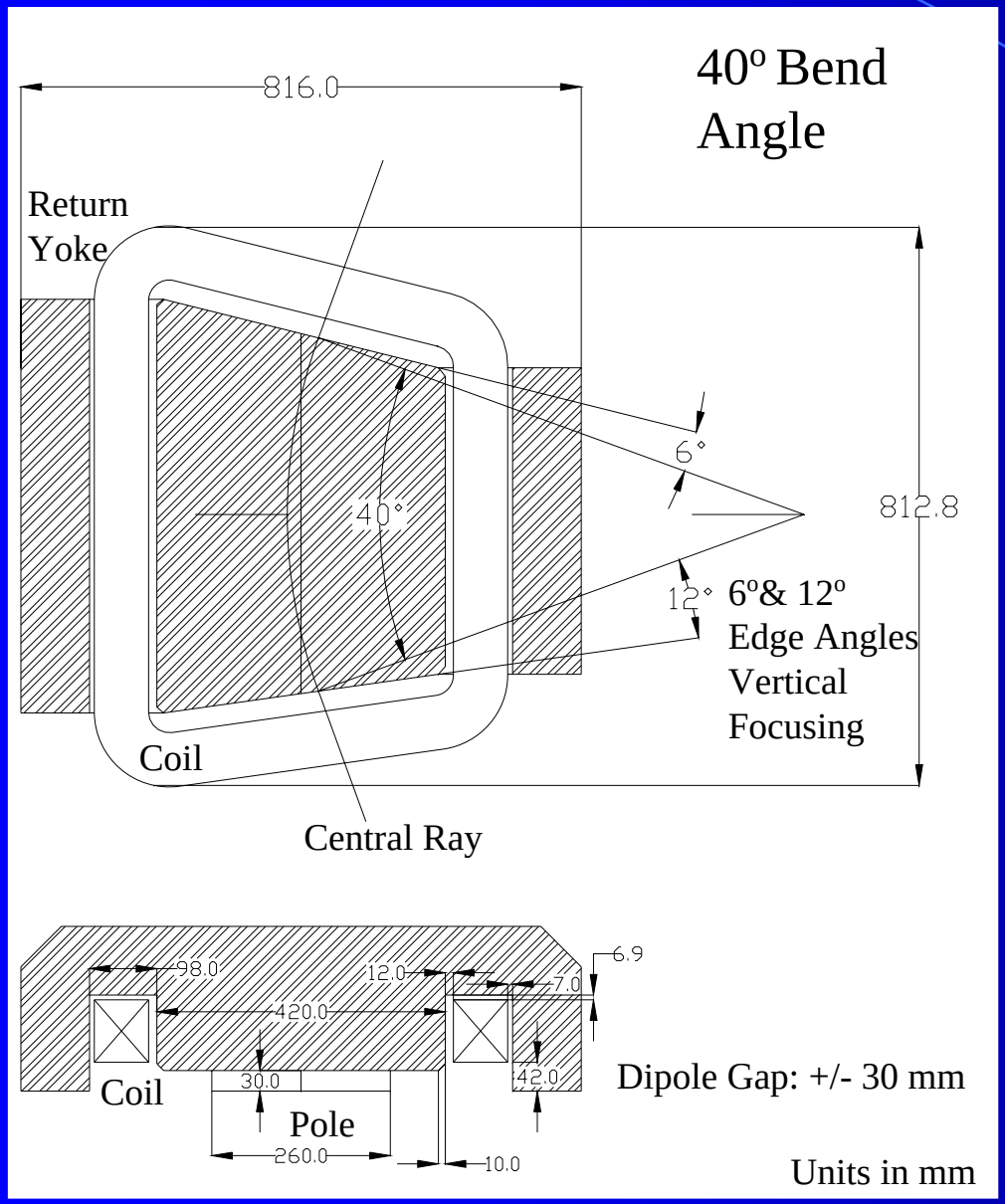

Iron-dominated Dipole Magnet with constant field B_{max} = 0.6 T in dipole gap (Good-field region).

- Soft magnet iron, B(H)
- Hollow copper conductor for high current density
- Iron magnetization saturates at about 1.7 T, small returns

Standard Quadrupole

Current in & out of drawing plane

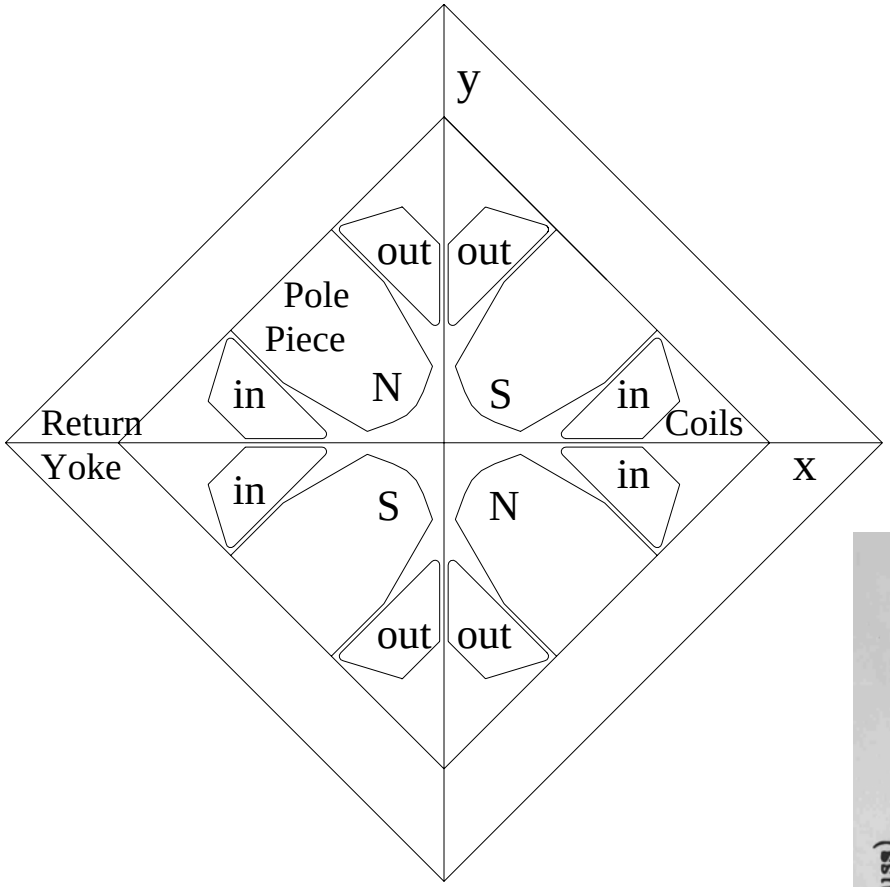

Note: Magnet is Iron/Current configuration with field as needed in ion-optical design. 2d/3d finite elements codes solving POISSON equation are well established

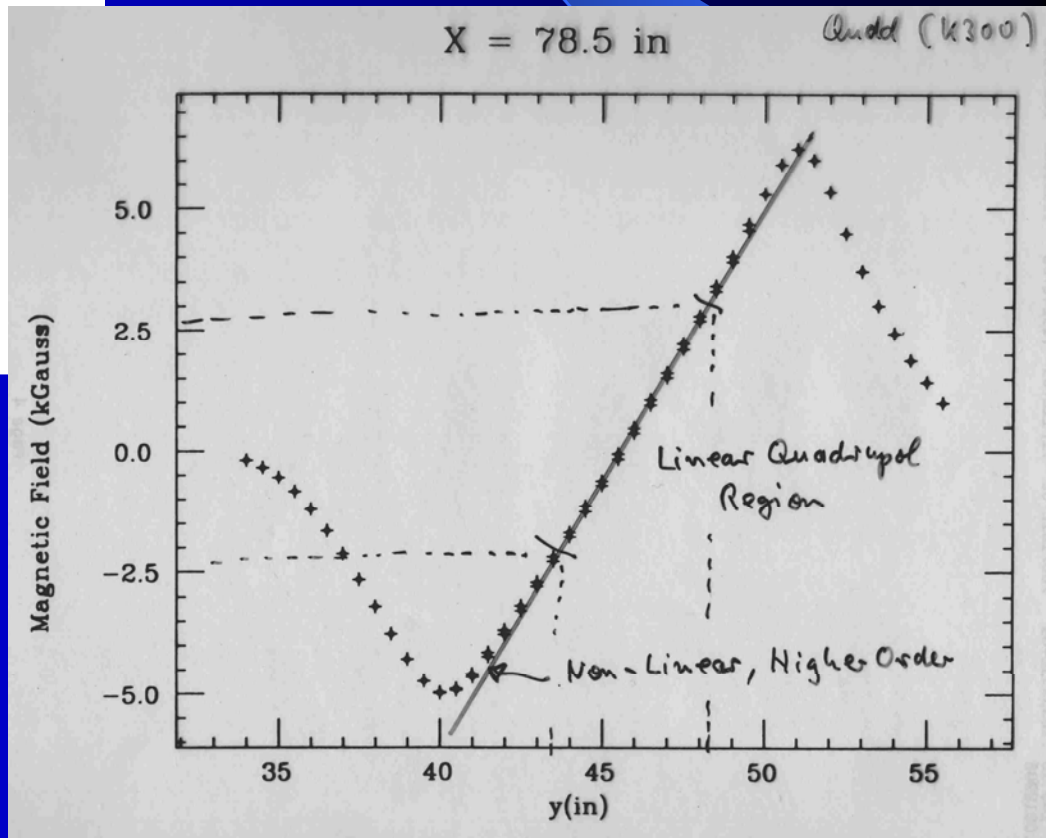

Forces on ions (quadrupole)

Quadrupole Hexapole Octopole

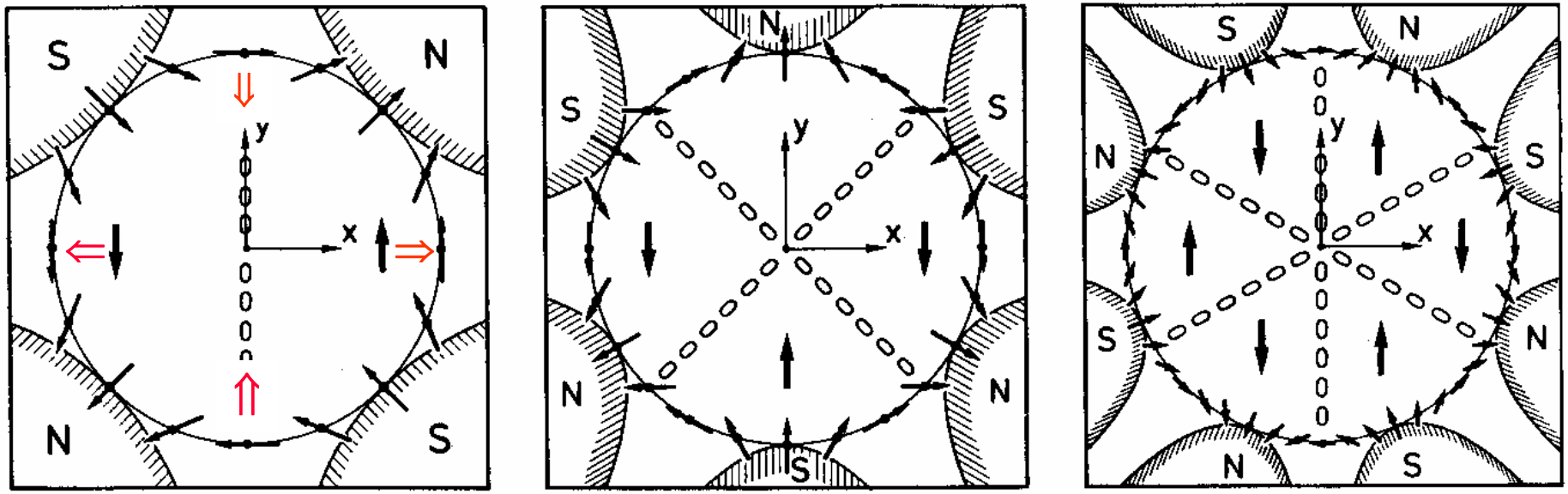

Fig. 9.15. Pole arrangements of magnetic quadrupoles, hexapoles, and octopoles are indicated. Also shown is a circle of radius r_0 along which the magnetic flux density is constant, and its direction varies as indicated. Finally, strings of zeros indicate lines along which B_y the y component of the magnetic flux density vanishes. These lines separate regions in which B_y is parallel or antiparallel to the y axis.

Horizontally defocusing quadrupole for ions along – z axis into the drawing plane. See Forces ⇑⇐⇓⇒ in direction v x B

A focusing quadrupole is obtained by a 90° rotation around the z axis

Ion optics of a quadrupole
SINGLET
&
DOUBLET

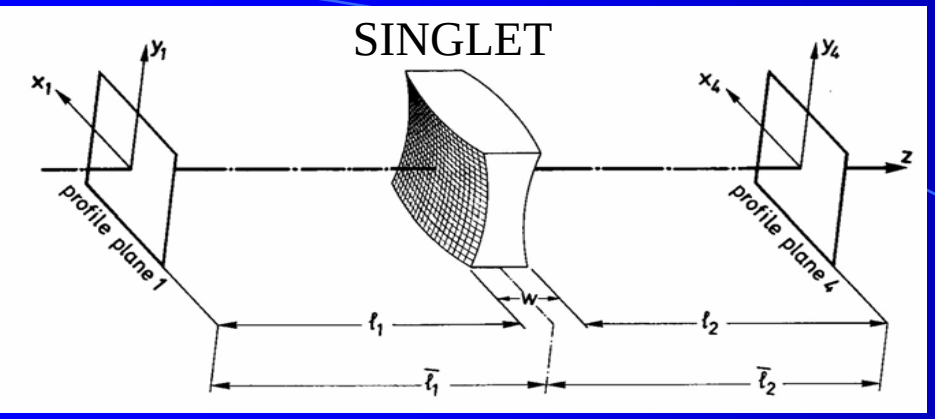

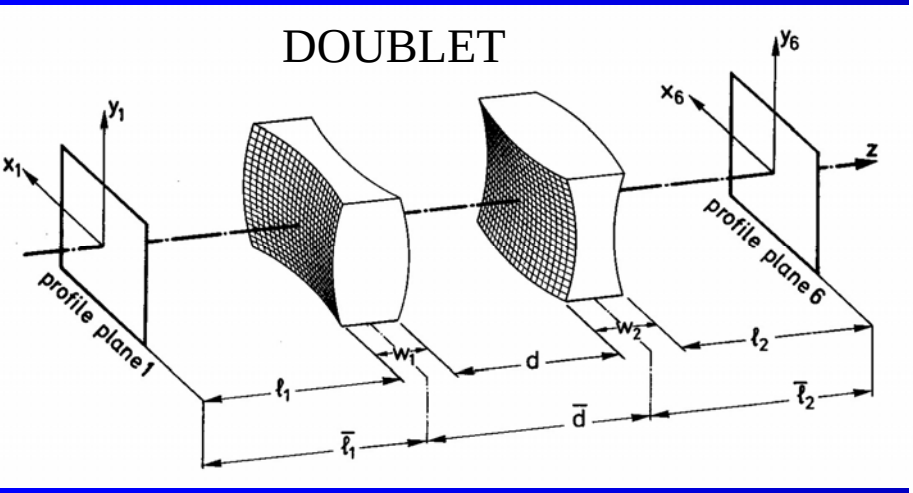

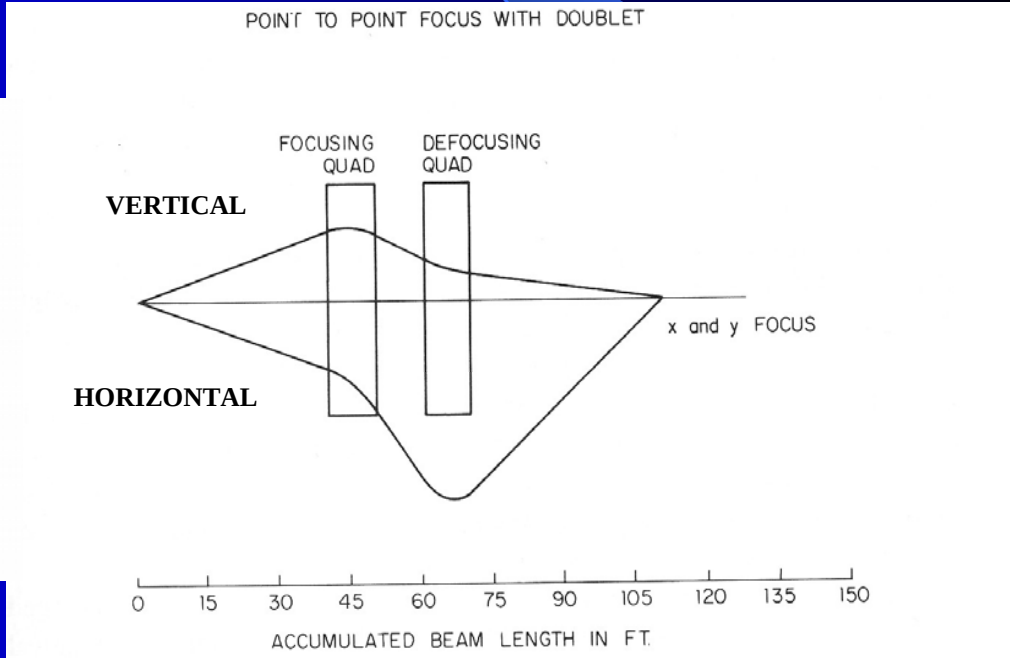

Figure 1.9 Point-to-point focusing with a quadrupole doublet. The two trajectories shown are in the horizontal and vertical planes respectively.

Focusing with a quadrupole TRIPLET

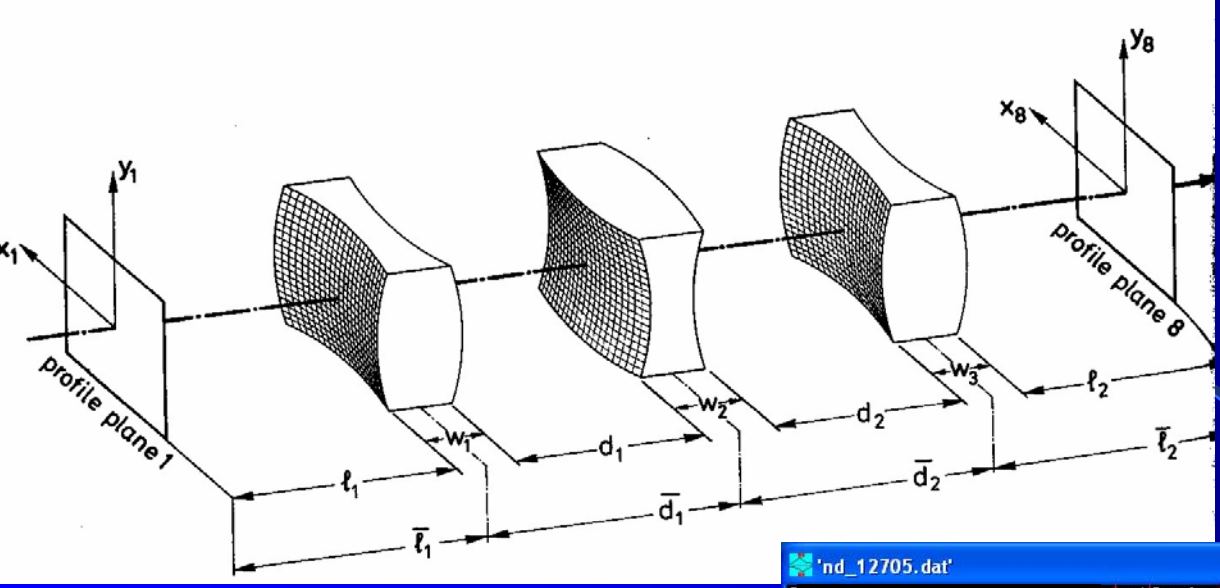

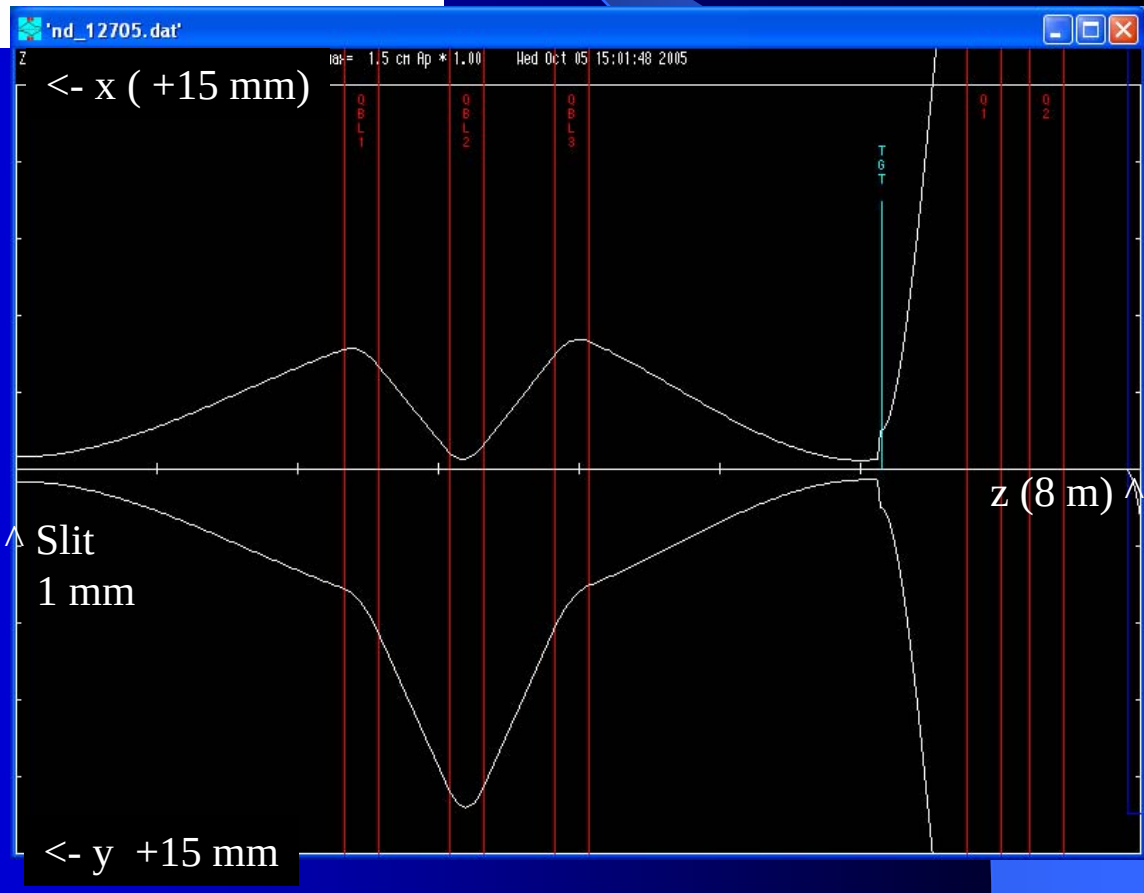

Screen shot of TRANSPORT design calculation of **Quadrupole Triplet** upstream of St. George target. Shown are the horiz. (x) and vert. (y) envelops of the phase ellipse.

Note beam at Slit has +/- 2 mrad and at target TGT +/- 45 mrad angle opening.

This symmetical triplet 1/2F-D-1/2F corresponds to an optical lens.

K600 Spectrometer

Bending radius ρ_0 = 2.0 m
B_{max} = 1.7 T
Gap = 5 cm (D 1), 6cm (D2)
Weight = ~ 30 tons (D1)
~ 45 tons (D2)

Medium Dispersion: B(D1)= B(D2)
Resolving power: $p/\Delta p$ = 20000
Dispersion = 12 cm/% (= 12 m)
Magnification M_x = 0.41
Large range: E_{min}/E_{max} = 1.14

Kinematic correction: K coil
Hexapole correction: H coil

The K600 is shown in 0° Transmission mode

High Dispersion Plane
B(D1) > B(D2)

IUCF K600,decommissioned In 1999, now in WS line RCNP

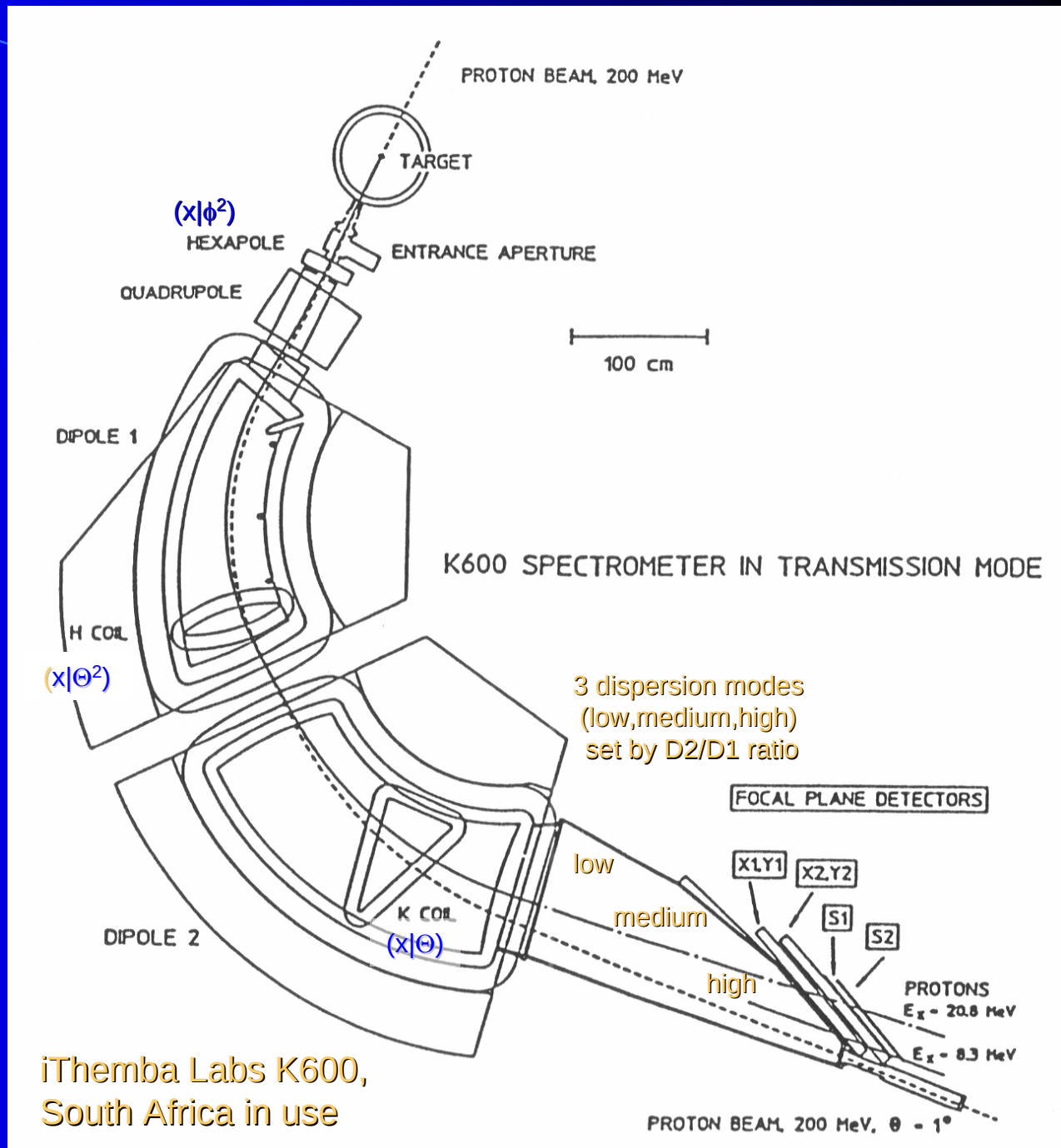

iThemba Labs K600, South Africa in use

BIG KARL Spectrometer (Juelich, KFZ)

Bending radius ρ_0 = 1.98 m
B_{max} = 1.7 T
Gap = 6cm
Weight = ~ 50 tons (D1)
~ 70 tons (D2)

Resolv. power: $p/\Delta p$ = 0 - 20600
Dispersion = -2.0 to 26 cm/%
Magnification M_x = 0.63 – 1.26
Magnification M_y = 25.4 – 1.94
Large range: E_{min}/E_{max} = 1.14
Solid angle: < 12.5 msr

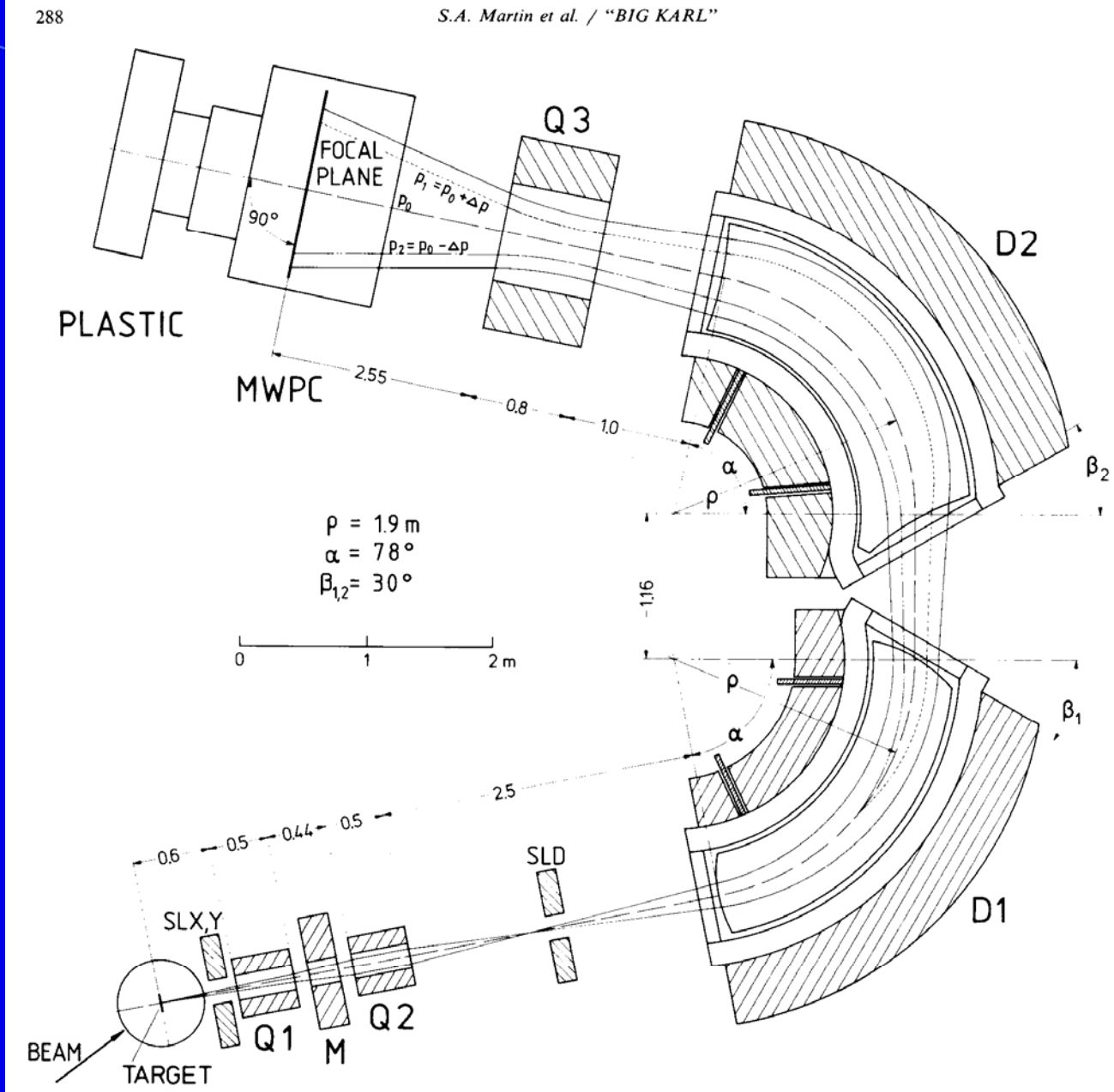

Fig. 9. Arrangement of the magnetic elements of the QQDDQ spectrometer BIG KARL. The central ray (optical axis) is shown as dashed curve. The outermost rays with the extreme radial distances are drawn as full lines. Four channels in the inner yokes allow NMR probes to be moved into the gaps of the dipoles for radial field measurements. The multipole element between Q1 and Q2 allows the correlation of vertical aberration.

BIG KARL Sample Spectra

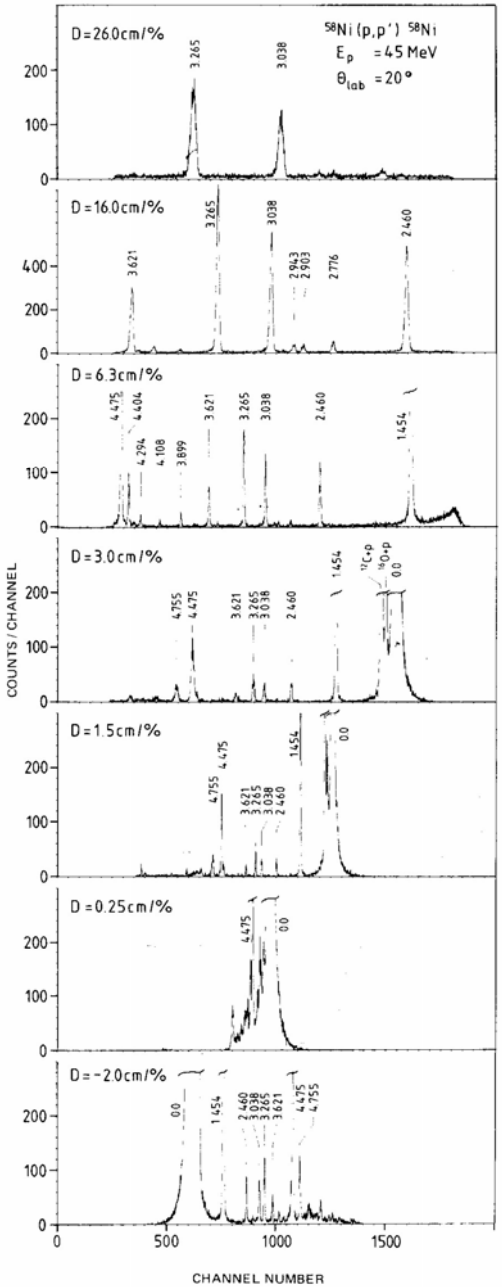

Fig. 4. Spectra of ^{58}Ni(p, p′) measured for different dispersions $D = 26$, 16, 6.3, 3, 1.5, ~ 0.25 and −2 cm/%. The spectrograph was optimized for $D = 16$ cm/%.

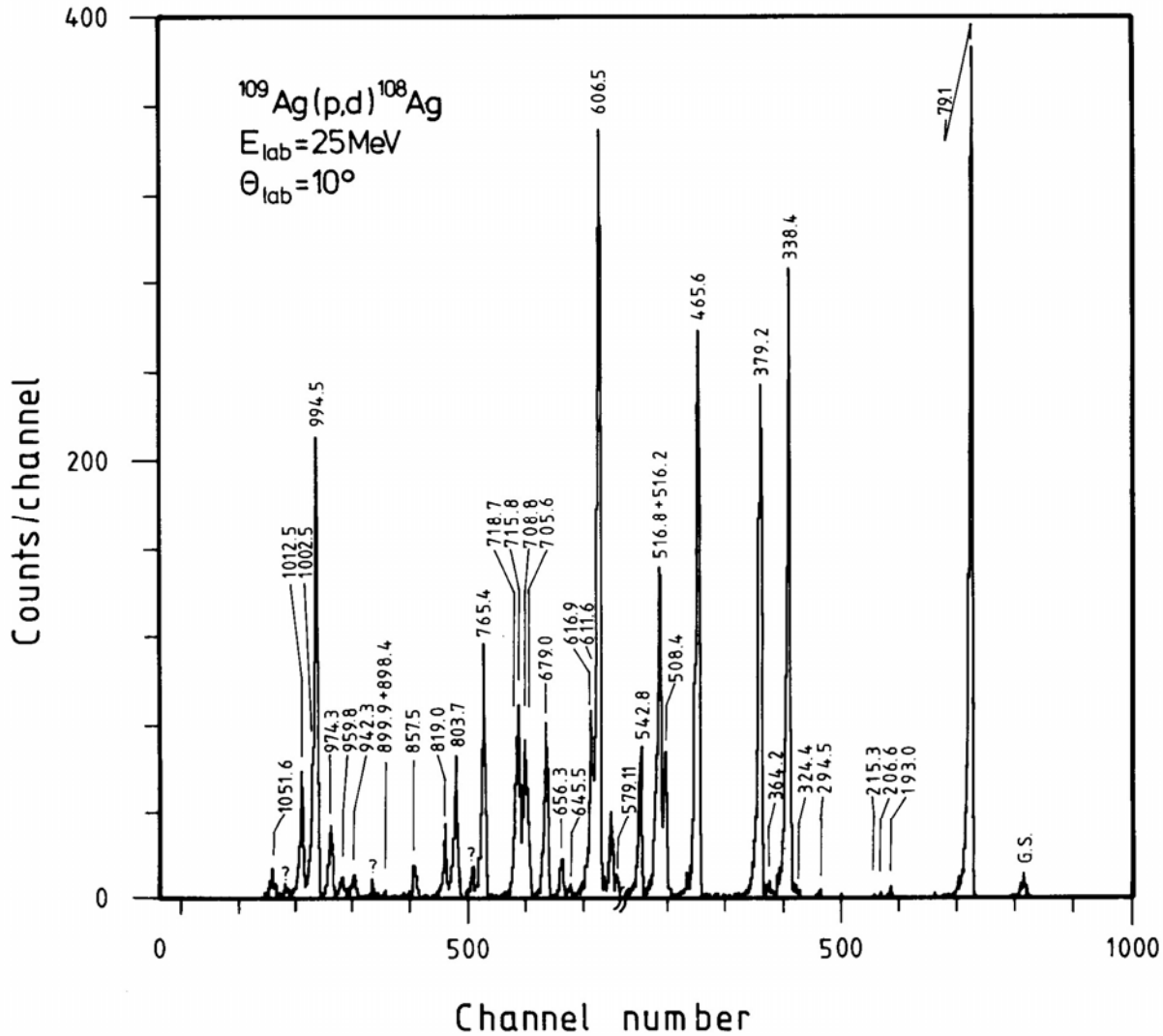

Fig. 19. High resolution spectrum of the (p, d) neutron pick up reaction on ^{109}Ag at 25 MeV incident energy and a solid angle of 1.2 msr. The resolution was 4 keV.

Grand Raiden High Resolution Spectrometer

Max. Magn. Rigidity: 5.1 Tm
Bending Radius: 3.0 m
Solid Angle: 3 msr

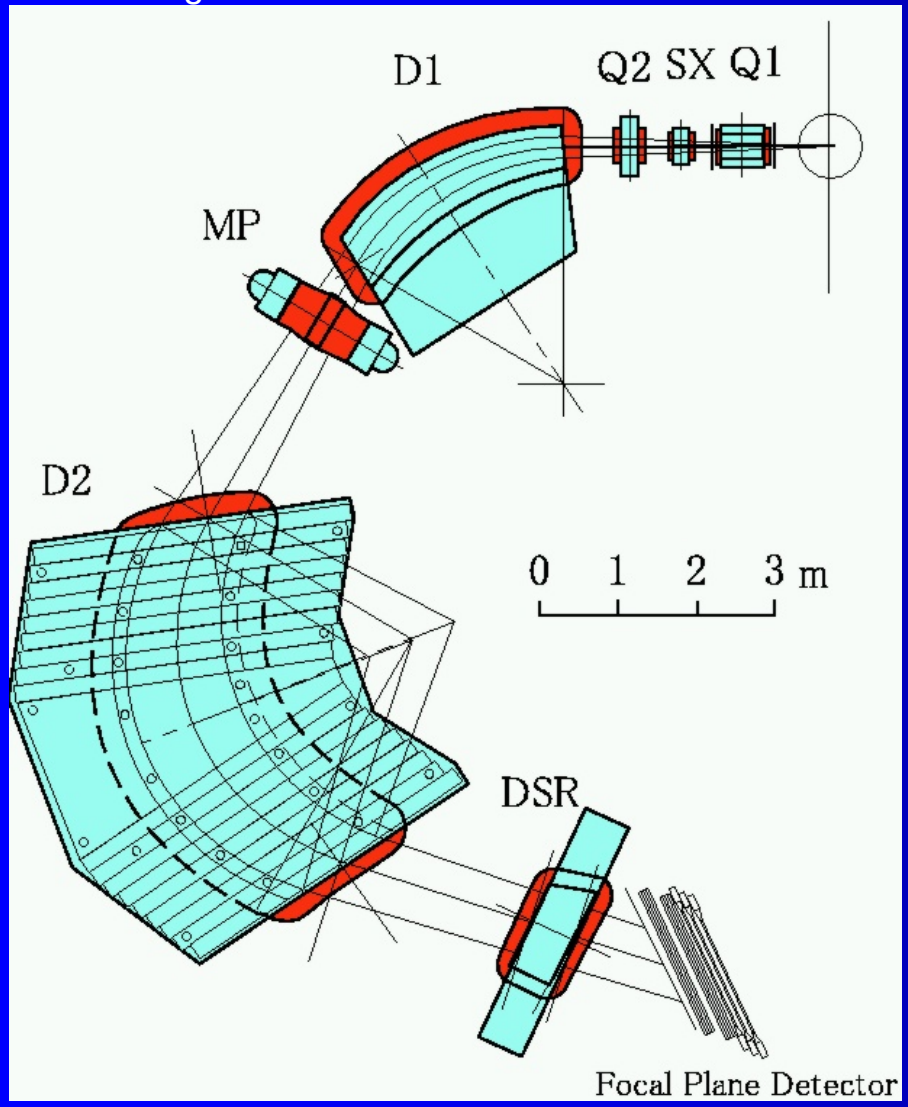

Beam Line/Spectrometer fully matched

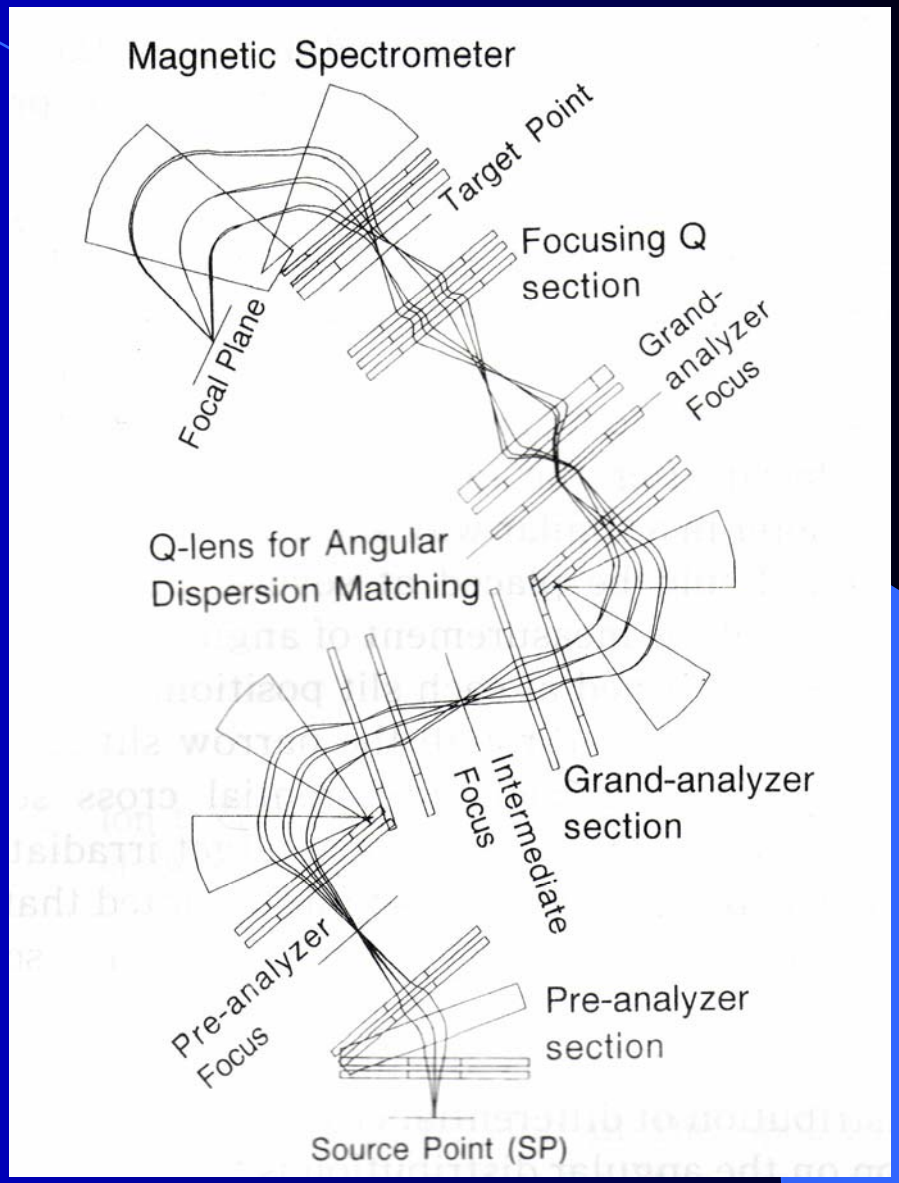

The Wien Filter

$$\vec{F} = q\vec{E} + q\vec{v} \times \vec{B} \quad (1)$$

Electric force — Magnetic force

$F = 0$ when $qE = qv \times B$ with $E \perp B$

$v = E/B$ with $E \perp B$ (19)

Design study of Wien Filter for St. George

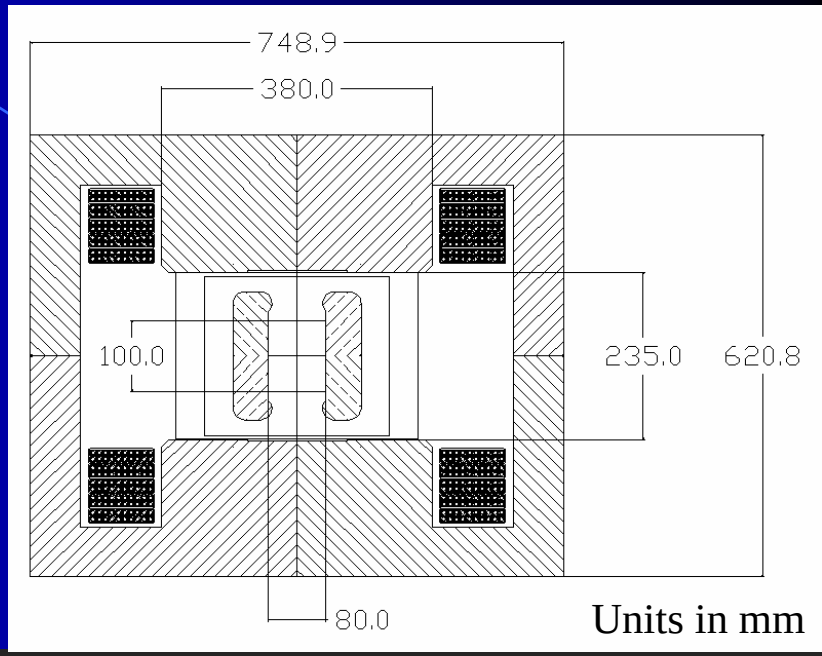

Electrostatic system of Danfysik Wien Filter

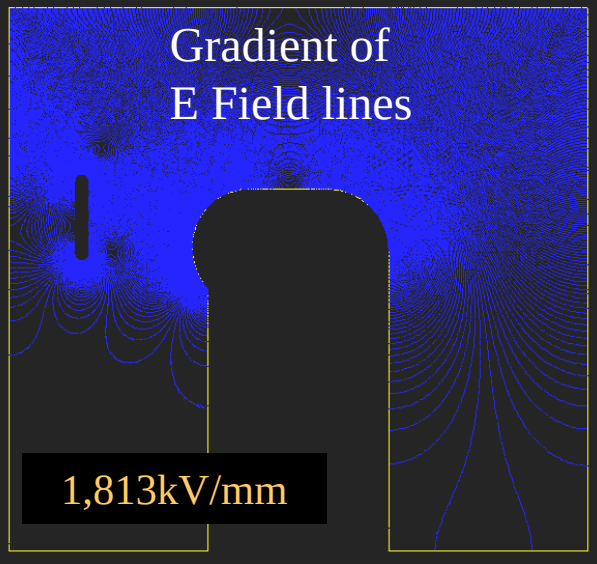

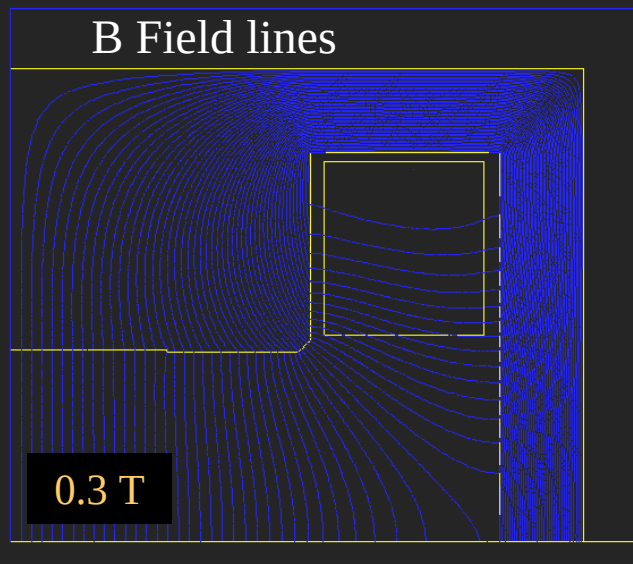

Discussion of Diagnostic Elements

Some problems:

- Range < 1 to $> 10^{12}$ particles/s
- Secondary beam intensities typically up to 10^6 part./s
- Interference with beam, notably at low energies
- Cost can be very high
- Signal may not represent beam properties (e.g. blind viewer spot)

Some solutions:

- Viewers, scintillators, quartz with CCD readout
- Slits (movable) Faraday cups (current readout)
- Harps, electronic readout, semi- transparent
- Film (permanent record, dosimetry, e.g. in Proton Therapy)
- Wire chambers (Spectrometer, secondary beams)

- Faint beam $10^{12} \longrightarrow 10^3$ (Cyclotrons: MSU, RCNP, iThemba)

Hall Probe

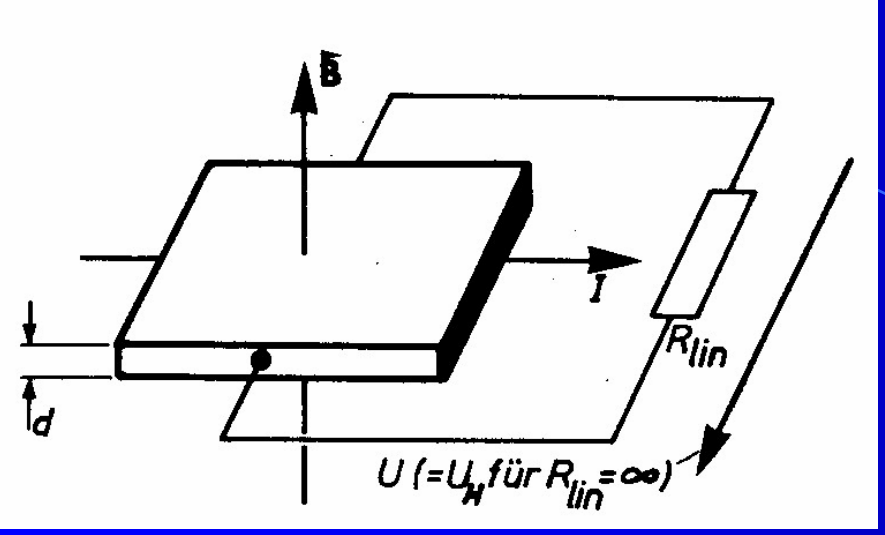

Hall Effect: $U_H = \frac{R_H}{d} BI$ (20)

Lorentz force ev x B on electrons with velocity v that constitute the current I

R_H = Hall constant, material property

Remarks:

- Precision down to ~ 2 10^{-4}
- Needs temperature calibration
- Probe area down to 1 mm by 1 mm
- Average signal in gradient field (good for quadrupole and fringe field measurement)

NMR Probe

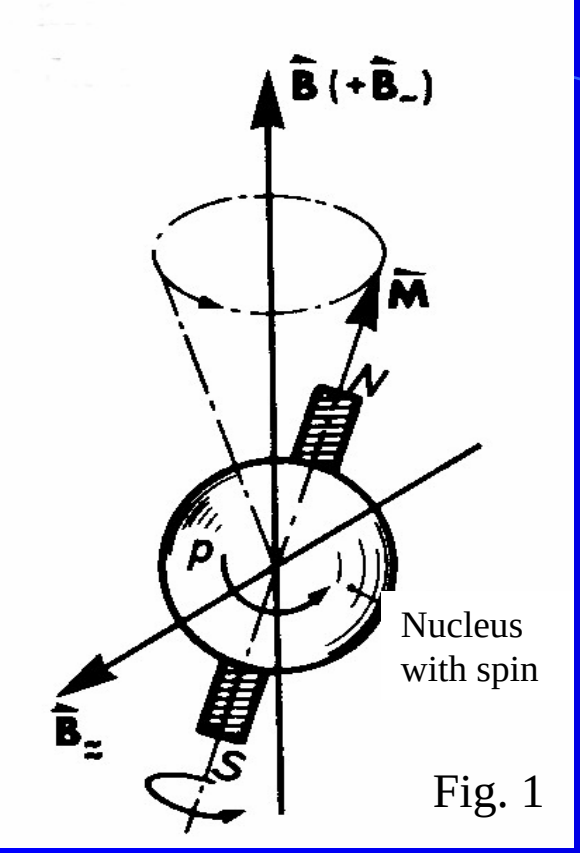

Fig. 1

Nuclear spin precesses
in external field B
With Larmor frequency

$$f_L = \frac{2\mu}{h} B \qquad (21)$$

μ = p, d magn. Moment
h = Planck constant

f_L (proton)/B = 42.58 MHz/T

f_L (deuteron)/B = 6.538 MHz/T

Principle of measurement:
Small (e.g. water probe), low frequency wobble coil B + $B_\sim$, tuneable HF field $B_\approx$ (Fig. 1) with frequency f_t , observe Larmor resonance on Oscilloscope (Fig. 2). When signal a & b coincide the tuneable frequence $f_t = f_L$

- Precision ~ 10^{-5}
- Temperature independent
- Needs constant B in probe (5 x 5 mm) to see signal!

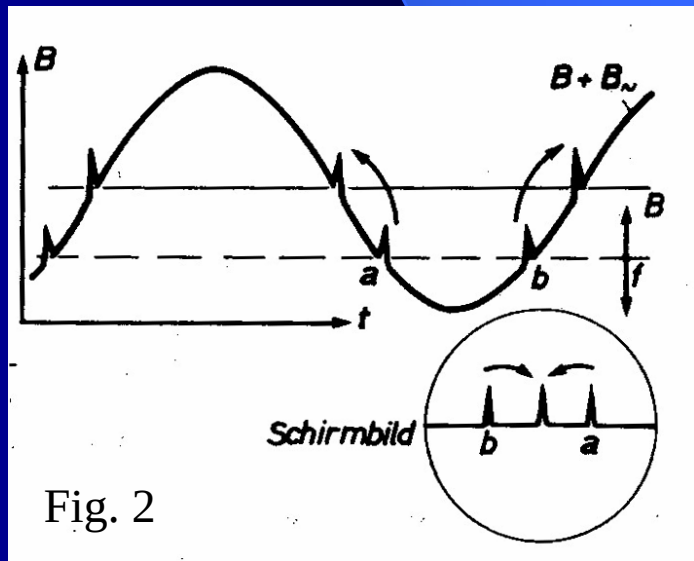

Fig. 2

Search Coil used in field map of S800, MSU

Induced Voltage
in search coil
U = - dB/dt

Coil is moved from outside
B = 0 T to inside B_{max}
(calibrated with NMR probe)
B at location (x,y) is obtained
by intergration

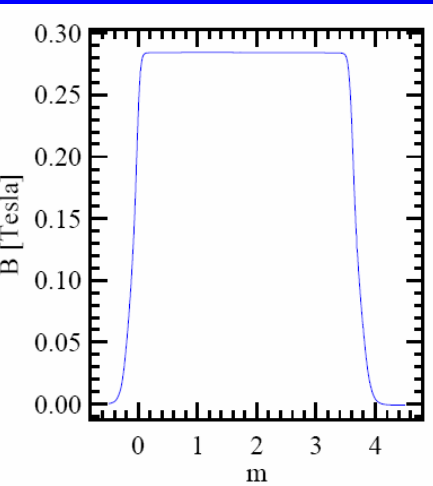

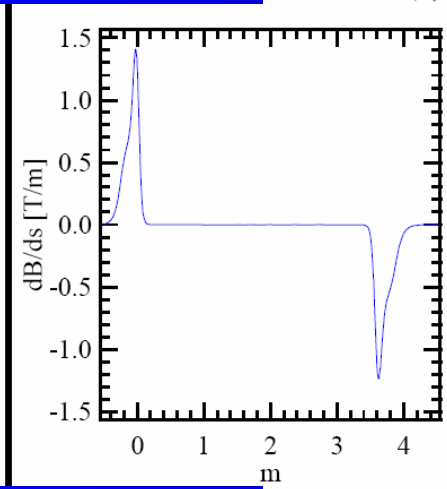

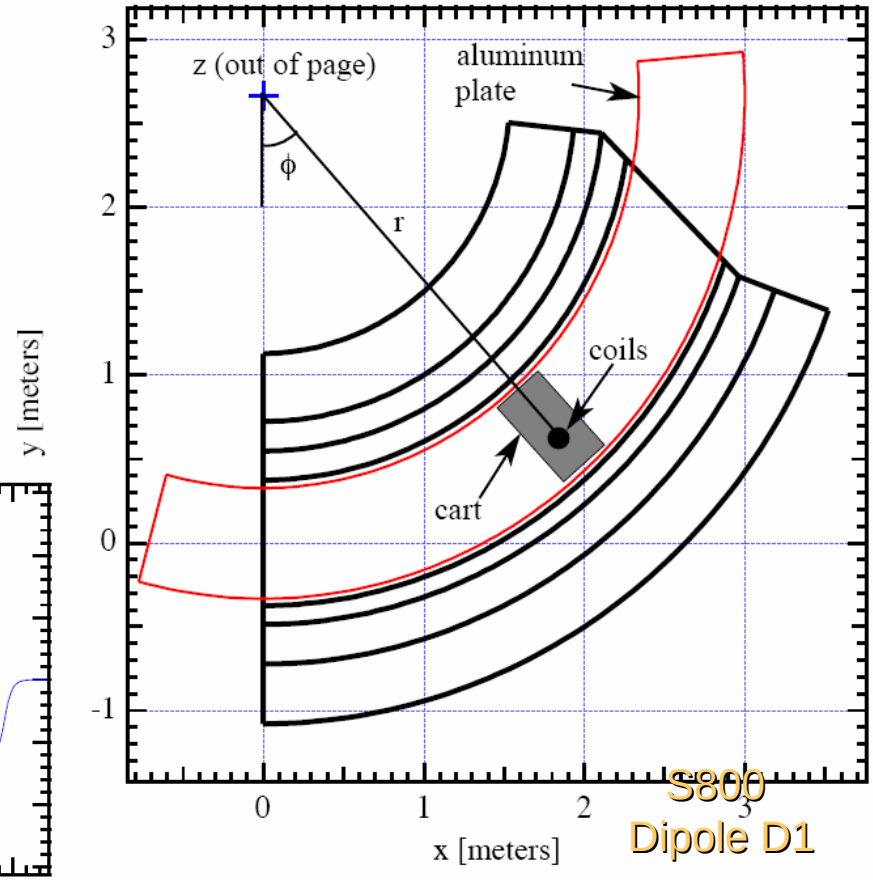

Figure 3.3: Schematic of the mapper showing the coordinate system used. The thick black lines are the magnet steel, the thin lines are the mapper plate. The gray box represents the cart that moves up and down along the plate. The three cylindrical coordinates are shown originating from a typical coil position on the cart (z is out of the page).

Ref: J. A. Caggiano, Dissertation, NSCL MSU, 1999,
Spectroscopy of Exotic Nuclei with the S800 Spectrometer

Field map of D2 of S800, MSU

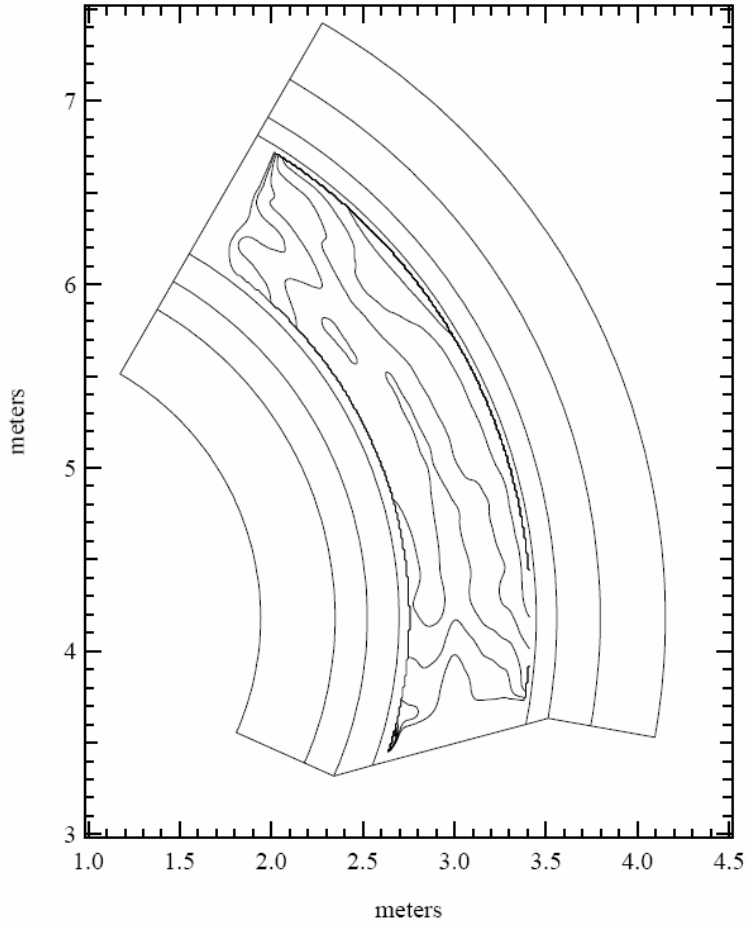

Figure 3.12: A D2 field map at 0.28 Tesla, plotted above 99% of the field strength. The contours are separated by one Gauss, indicating a very flat central field.

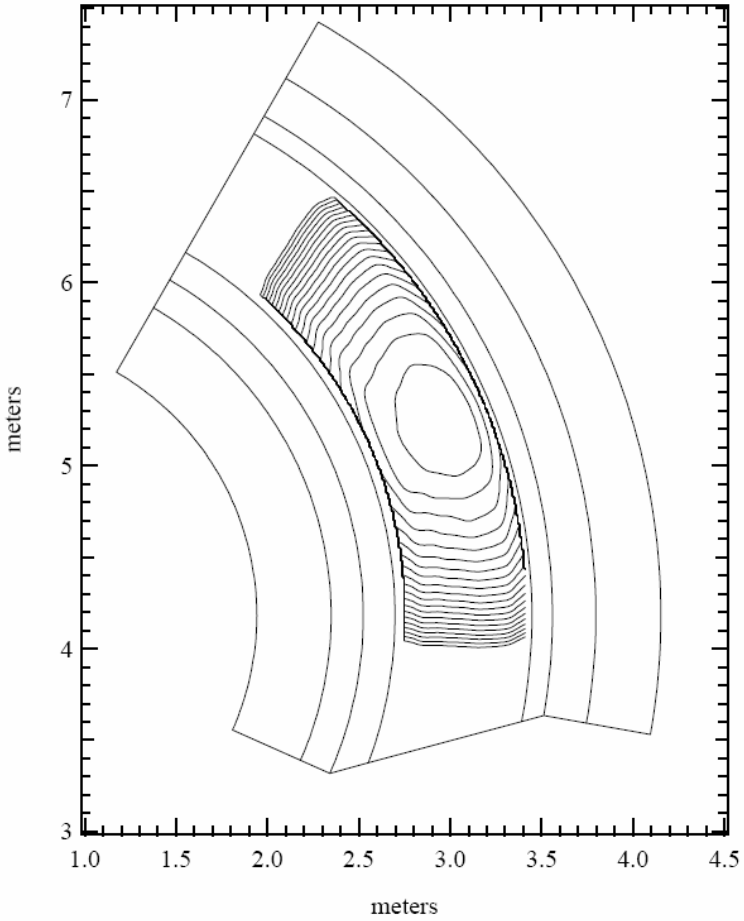

Figure 3.13: Field measurements for D2 at 1.6 Tesla. All contours are separated by 5 Gauss. In sharp contrast to Figure 3.12, the field exhibits a bowing behavior characteristic of saturation effects.

Ref: J. A. Caggiano, Dissertation, NSCL MSU, 1999,
Spectroscopy of Exotic Nuclei with the S800 Spectrometer

End Lecture 2